Hanwha Vision

NETWORK CAMERA

User Manual

PNM-9322VQP
SLA-2M2400P/2M2800P/2M3600P/2M6000P/
2M1200P/5M3700P/5M4600P/5M7000P

CE

Network Camera
User Manual

Copyright

©2020 Hanwha Vision Co., Ltd. All rights reserved.

Trademark

Each of trademarks herein is registered. The name of this product and other trademarks mentioned in this manual are the registered trademark of their respective company.

Restriction

Copyright of this document is reserved. Under no circumstances, this document shall be reproduced, distributed or changed, partially or wholly, without formal authorization.

Disclaimer

Hanwha Vision makes the best to verify the integrity and correctness of the contents in this document, but no formal guarantee shall be provided. Use of this document and the subsequent results shall be entirely on the user's own responsibility. Hanwha Vision reserves the right to change the contents of this document without prior notice.

※ **Design and specifications are subject to change without prior notice.**

※ **The initial administrator ID is "admin" and the password should be set when logging in for the first time.**
Please change your password every three months to safely protect personal information and to prevent the damage of the information theft.
Please, take note that it's a user's responsibility for the security and any other problems caused by mismanaging a password.

IMPORTANT SAFETY INSTRUCTIONS

1. Read these instructions.
2. Keep these instructions.
3. Heed all warnings.
4. Follow all instructions.
5. Do not use this apparatus near water.
6. Clean the contaminated area on the product surface with a soft, dry cloth or a damp cloth.
   (Do not use a detergent or cosmetic products that contain alcohol, solvents or surfactants or oil constituents as they may deform or cause damage to the product.)
7. Do not block any ventilation openings, Install in accordance with the manufacturer's instructions.
8. Do not install near any heat sources such as radiators, heat registers, stoves, or other apparatus (including amplifiers) that produce heat.
9. Do not defeat the safety purpose of the polarized or grounding-type plug. A polarized plug has two blades with one wider than the other. A grounding type plug has two blades and a third grounding prong. The wide blade or the third prong are provided for your safety. If the provided plug does not fit into your outlet, consult an electrician for replacement of the obsolete outlet.
10. Protect the power cord from being walked on or pinched particularly at plugs, convenience receptacles, and the point where they exit from the apparatus.
11. Only use attachments/ accessories specified by the manufacturer.
12. Use only with the cart, stand, tripod, bracket, or table specified by the manufacturer, or sold with the apparatus. When a cart is used, use caution when moving the cart/ apparatus combination to avoid injury from tip-over.

13. Unplug this apparatus during lighting storms or when unused for long periods of time.
14. Refer all servicing to qualified service personnel. Servicing is required when the apparatus has been damaged in any way, such as power-supply cord or plug is damaged, liquid has been spilled or objects have fallen into the apparatus, the apparatus has been exposed to rain or moisture, does not operate normally, or has been dropped.
15. This product is intended to be supplied by a Listed Power Supply Unit marked "Class 2" or "LPS" and rated from PoE, 1.15A. (PNM-9322VQP)
16. This Lens module has to be connected with equipment, which supplied by a power supply unit marked "Class 2" or "LPS". (SLA-2M2400P/2M2800P/2M3600P/2M6000P/2M1200P/5M3700P/5M4600P/5M7000P)
17. This product is intended to be supplied by isolation power.
18. If you use excessive force when installing the product, the camera may be damaged and malfunction.
    If you forcibly install the product using non-compliant tools, the product may be damaged.
19. Do not install the product in a place where chemical substances or oil mist exists or may be generated. As edible oils such as soybean oil may damage or warp the product, do not install the product in the kitchen or near the kitchen table.
    This may cause damage to the product.
20. When installing the product, be careful not to allow the surface of the product to be stained with chemical substance.
    Some chemical solvents such as cleaner or adhesives may cause serious damage to the product's surface.
21. If you install/disassemble the product in a manner that has not been recommended, the production functions/ performance may not be guaranteed.
    Install the product by referring to "Installation & connection" in the user manual.
22. Installing or using the product in water can cause serious damage to the product.
23. This device has been verified using STP cable. The use of appropriate GND grounding and STP cable is recommended to effectively protect your product and property from transient voltage, thunderstroke, communication interruption.

WARNING

TO REDUCE THE RISK OF FIRE OR ELECTRIC SHOCK, DO NOT EXPOSE THIS PRODUCT TO RAIN OR MOISTURE. DO NOT INSERT ANY METALLIC OBJECT THROUGH THE VENTILATION GRILLS OR OTHER OPENNINGS ON THE EQUIPMENT.

Apparatus shall not be exposed to dripping or splashing and that no objects filled with liquids, such as vases, shall be placed on the apparatus.

To prevent injury, this apparatus must be securely attached to the Wall/ceiling in accordance with the installation instructions.

※ **Pan/Tilt/Zoom motors and slip ring are warrantied for one year under continuous operation.**

CAUTION

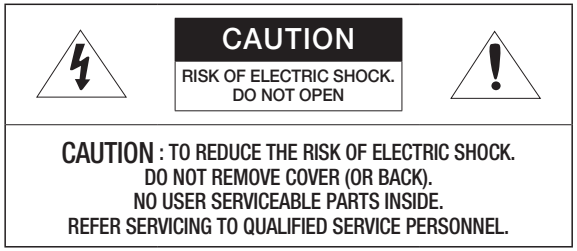

EXPLANATION OF GRAPHICAL SYMBOLS

The lightning flash with arrowhead symbol, within an equilateral triangle, is intended to alert the user to the presence of "dangerous voltage" within the product's enclosure that may be of sufficient magnitude to constitute a risk of electric shock to persons.

The exclamation point within an equilateral triangle is intended to alert the user to the presence of important operating and maintenance (servicing) instructions in the literature accompanying the product.

Class I construction

An apparatus with CLASS I construction shall be connected to a MAINS socket outlet with a protective earthing connection.

Battery

Batteries(battery pack or batteries installed) shall not be exposed to excessive heat such as sunshine, fire or the like.

The battery cannot be replaced.

Disconnection Device

Disconnect the main plug from the apparatus, if it's defected. And please call a repair man in your location.

When used outside of the U.S., it may be used HAR code with fittings of an approved agency is employed.

CAUTION

RISK OF EXPLOSION IF BATTERY IS REPLACED BY AN INCORRECT TYPE.
DISPOSE OF USED BATTERIES ACCORDING TO THE INSTRUCTIONS.

ATTENTION

IL Y A RISQUE D'EXPLOSION SI LA BATTERIE EST REMPLACÉE PAR UNE BATTERIE DE TYPE INCORRECT.
METTRE AU REBUT LES BATTERIES USAGÉES CONFORMÉMENT AUX INSTRUCTIONS.

These servicing instructions are for use by qualified service personnel only.
To reduce the risk of electric shock do not perform any servicing other than that contained in the operating instructions unless you are qualified to do so.

The Test Monitor Out port of the product is provided for easier installation, and is not recommended for monitoring purposes.

Please use the input power with just one camera and other devices must not be connected.

When a new product box is opened (or during the initial use of the product), moisture might build up on the glass of the camera. The built-up moisture disappears naturally within a few hours after powered on.

Do not arbitrarily loosen or tighten the gore valve.

The ITE is to be connected only to PoE networks without routing to the outside plant.

The wired LAN hub providing power over the Ethernet (PoE) in accordance with IEEE 802.3bt shall be a UL Listed device with the output evaluated as a Limited Power Source as defined in UL60950-1 or PS2 as defined in UL62368-1.

Unit is intended for installation in a Network Environment 0 as defined in IEC TR 62102. As such, associated Ethernet wiring shall be limited to inside the building.

Please read the following recommended safety precautions carefully.

- The product has a damp-proof component attached to it. Due to the nature of the product, dews may be formed after energizing the product, but they will disappear in two to three hours.
- Since this product is equipped with a water-proof ventilation system, avoid installing it in a place that exhibits a sudden artificial change in temperature.
- Do not place this apparatus on an uneven surface.
- Do not install on a surface where it is exposed to direct sunlight, near heating equipment or heavy cold area.
- Do not place this apparatus near conductive material.
- Do not attempt to service this apparatus yourself.
- Do not place a glass of water on the product.
- Do not install near any magnetic sources.
- Do not block any ventilation openings.
- Do not place heavy items on the product.
- Please wear protective gloves when installing/removing the camera.
  The high temperature of the product surface may cause a burn.
- When connecting the HPoE injector to the external Internet, use either one of network cable port (LAN) or fiber optic port (SFP) but not both.

User's Manual is a guidance book for how to use the products.

The meaning of the symbols are shown below.

- Reference : In case of providing information for helping of product's usages
- Notice : If there's any possibility to occur any damages for the goods and human caused by not following the instruction

※ Please read this manual for the safety before using of goods and keep it in the safe place.

We do not guarantee the quality of third-party products (e.g. lenses, accessories) that you separately purchase.

In particular installation environments, there might be interference in radio communications. When interference of electromagnetic waves occurs between the product and radio communication device, it is recommended to keep a certain distance between the two or change the direction of the receiving antenna.

CONTENTS

OVERVIEW 3

3 Important Safety Instructions
6 Recommended PC Specifications
6 Recommended Micro SD/SDHC/SDXC Memory Card Specifications
7 What's Included (PNM-9322VQP)
8 What's Included (Lens module -optional)
8 Optional Accessories for Installation
9 At a Glance (PNM-9322VQP)
10 At a Glance (Lens module)

INSTALLATION & CONNECTION 11

11 Installation
16 Connecting with other Device

NETWORK CONNECTION AND SETUP 19

19 Connecting the Camera Directly to Local Area Networking
19 Connecting the Camera Directly to a DHCP Based DSL/Cable Modem
20 Using Device Manager
20 Automatically searching camera
20 Configuring IP address
21 Manually registering camera
21 Automatically configuring IP
22 Port Range Forward (Port Mapping) Setup
23 Connecting to the Camera from a Shared Local PC
23 Connecting to the Camera from a Remote PC via the Internet

WEB VIEWER 24

24 Connecting to the Camera
25 Password setting
25 Login
25 Camera Web Viewer Setup

APPENDIX 26

26 Troubleshooting

RECOMMENDED PC SPECIFICATIONS

- CPU : Intel(R) Core(TM) i7 3.4 GHz or higher
- RAM : 8G or higher
- Recommended browser: Chrome
- Supported browsers: Chrome, Safari, Firefox, MS Edge(chromium based)
- Supported OS : Windows, Mac, Linux, Android, iOS, Chrome
- Verification environment
  - Windows 10: Google Chrome version 80 or later, Firefox version 72 or later, MS Edge version 83 or later
  - Mac 10.13/14: Safari version 11.0.1 or later

※ The video play performance of the web viewer depends on the performance of the user's CPU and GPU.

RECOMMENDED MICRO SD/SDHC/SDXC MEMORY CARD SPECIFICATIONS

- Recommended capacity : 16GB ~ 256GB(MLC type required)
- Recommended Manufacturers : SanDisk, Transcend
- Product Type : High endurance
- The compatibility varies depending on the card manufacturers and types.
- It is recommended to use a memory card of 16GB or more that conforms to the UHS-3 class (MLC type) specification.

- Micro SD card supports up to 256GB per slot, and only the video of the slot's channel is recorded.

WHAT'S INCLUDED (PNM-9322VQP)

Please check if your camera and accessories are all included in the product package.
(As for each sales country, accessories are not the same.)

Appearance	Item Name	Quantity	Description
	Camera	1	
	Quick Guide (Optional)	1	
	SFP HPoE injector	1	Connects power supply and network
	Cable for the testing monitor	1	Used to test the camera connection to a portable display device
	Power cord	1	Connects to SFP HPoE injector
	Audio cable	1	Used to connect with the audio port
	Alarm Terminal Block	1	Connect alarm I/O
	Torx L wrench	1	Used to assemble/disassemble the dome cover and the Micro SD card cover
	Installed base	1	Bracket for product installation

Appearance	Item Name	Quantity	Description
	Waterproof accessories	1	Used for installation in a humid area
	Screw bit (Torx 30)	1	Used to tighten the nuts after connecting the installed base with the camera body
	Screw bit (Torx 20)	1	Used to assemble/disassemble the dome cover and the Micro SD card cover
	Ferrite Core	1	Used to block the high-frequency component(s) contained in the power supply and the signal end from being radiated to the outside ■ It is recommended to wind it 2 times around the power cable and the LAN cable before use.

WHAT'S INCLUDED (LENS MODULE -OPTIONAL)

To use this product, one of the separately sold lenses shown below needs to be purchased.

Appearance	Item Name	Description	Model Name
	Lens module	Mounted to PNM-9322VQP	SLA-2M2400P
			SLA-2M2800P
			SLA-2M3600P
			SLA-2M6000P
			SLA-2M1200P
			SLA-5M3700P
			SLA-5M4600P
			SLA-5M7000P

OPTIONAL ACCESSORIES FOR INSTALLATION

You can purchase appropriate optional accessories available.

Product type	Wall mount	Ceiling mount
Model Name	SBP-390WM2	SBP-300CMW
	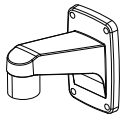	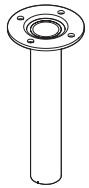

Product type	Corner mount	Ceiling mount
Model Name	SBP-300KMW	SBP-300PMW
	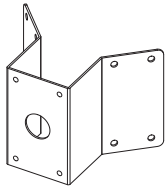	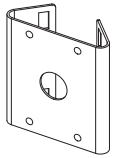

Product type	Parapet mount
Model Name	SBP-300LMW
	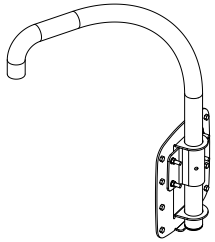

AT A GLANCE (PNM-9322VQP)

Appearance

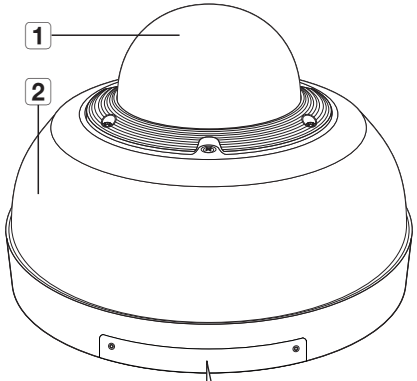

Components

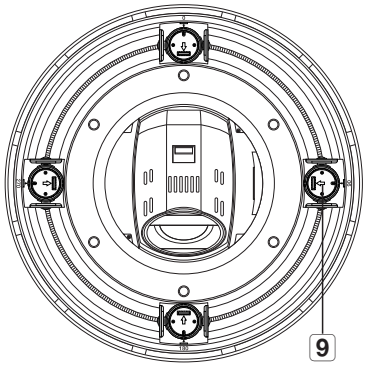

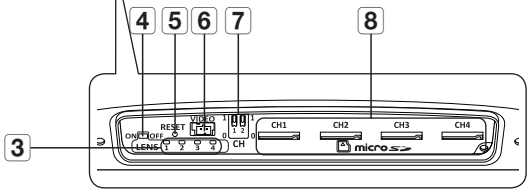

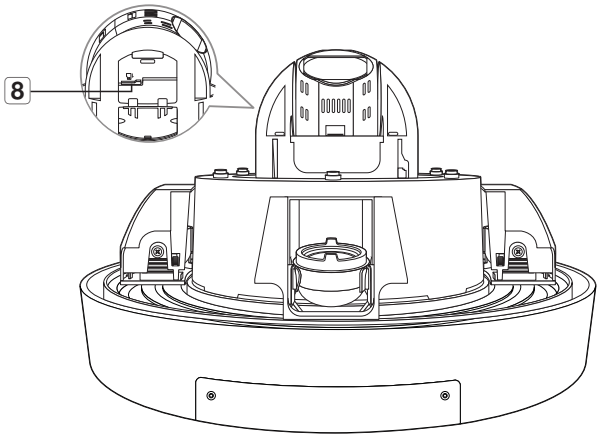

Item	Description
1 Dome cover	Case cover used to protect the lens and the main unit.
2 Window cover	
3 Status Indicators for Lens Module (normal: green, abnormal: red)	If the lens module is attached correctly, the green LED will illuminate and then turn off after approximately 40 seconds. (to prevent undesirable reflections)
4 Power Switch	Switch used to turn the product On/off. ! Use it only to replace your lens module.
5 Reset Button	The button restores all camera settings to the factory default. Press and hold for about 5 seconds to reboot the system. ! If you reset the camera, the network settings will be adjusted so that DHCP can be enabled. If there is no DHCP server in the network, you must run the Device Manager program to change the basic network settings such as IP address, Subnet mask, Gateway, etc., before you can connect to the network.
6 Test monitor out port	Output port for test monitoring the video output. Use the test monitor cable to connect to a mobile display and check the test video.
7 Channel DIP Switch	Change the DIP switches to specify the channel you want to use to view the installation video. ! You can only check the videos of the 4CH lens module, not the videos of the PTZ.
8 Micro SD card slot	Compartment for the Micro SD card.
9 Lens module mounting portion	This is the terminal to mount the lens module.

Installation side

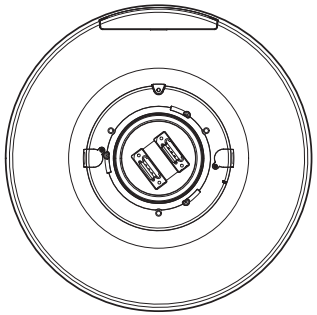

Inner View of Installation Base

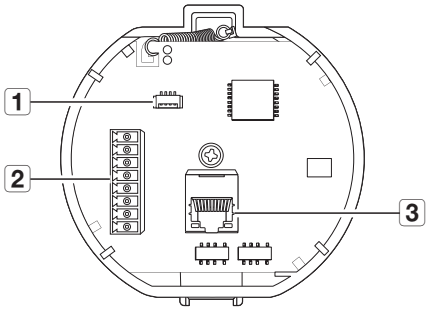

Item	Description
1 Alarm I/O Port	Terminals that connect alarm I/O cables.
2 HPoE Port	A terminal that connects power and network through the RJ45 cable.
3 Audio cable port	This is a terminal to connect audio cable.

AT A GLANCE (LENS MODULE)

Appearance

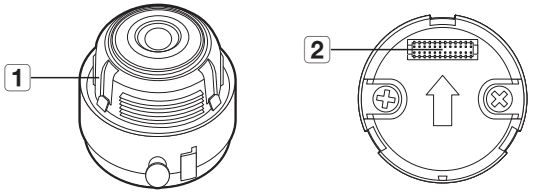

Item	Description
1 Lens module	This is a lens module that records video.
2 Camera connector	This is a terminal to connect with the camera.

INSTALLATION

- This camera is waterproof and in compliance with the IP66 spec, but the jack connected to the external cable is not. You are recommended to install this product below the edge of eaves to prevent the cable from being externally exposed.

Precautions before installation

Ensure you read out the following instructions before installing the camera:

- Select an installation site that can hold at least 5 times the camera's weight.
- Stuck-in or peeled-off cables can cause damage to the product or a fire.
- For safety purposes, keep anyone else away from the installation site.
  And put aside personal belongings from the site, just in case.
- If the product is installed with excessive force, it may cause damage to the camera due to malfunction.
  Forcing assembly using non-compliant tools may damage the product.
- Do not install or remove the lens module while the power is on.

Disassembling

With the Torx L wrench or screw bit, loosen the fastening screws counter-clockwise and remove the dome and window covers.

- You do not have to completely remove the screws from the covers.
- Remove the dome cover only when installing the Micro SD card for PTZ. In all other cases, do not remove the dome cover.
- Remove the window cover when installing the lens module.
  You do not have to remove the dome cover.

- Since the dome and window covers are transparent, there is no safety cable. Please be careful not to drop it.

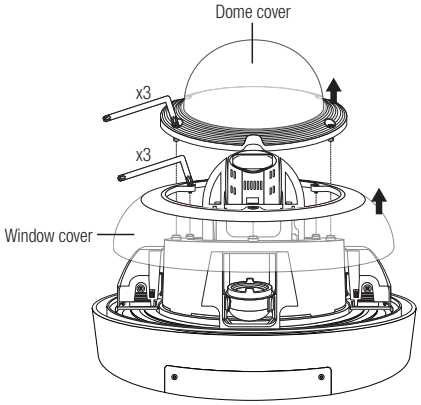

Inserting a Micro SD card

1. Using the Torx L wrench or screw bit(Torx 20), remove the dome cover and the micro SD card cover.

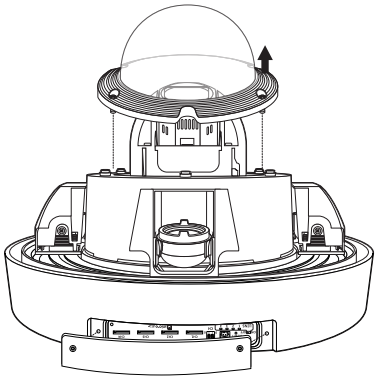

2. Insert a Micro SD card in the arrow direction shown in the figure.

- Before installing the camera, the Micro SD card should be inserted while the power source and the body are separated.
- Do not forcefully insert it in the reverse direction. It might damage your Micro SD card and your product.
- When it rains or the humidity is high, insertion or ejection of a Micro SD card is not recommended.
- Disassembly of the product cover should be finished within 5 minutes, or there will be the risk of internal dew condensation.
- Remove the dome cover when installing the Micro SD card for PTZ.

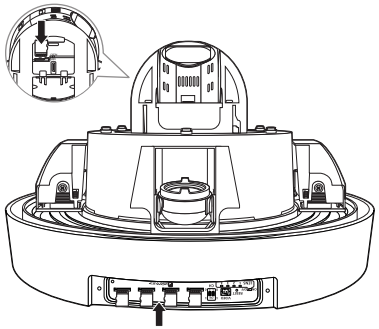

Removing a Micro SD card

1. Gently press down on the exposed end of the Micro SD card as shown in the figure below to eject the Micro SD card from the slot.

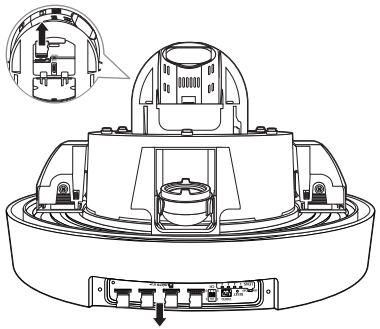

- You should save an Micro SD card for each channel.
- Before removing the Micro SD card, in <**Setup** (⚙)> - <**Event**> - <**Storage**>, set the device to <**Off**> and press the [**Apply**] button and turn the camera off.
- If you turn off the camera or remove the Micro SD card that contains data from the product, the data may be lost or damaged.

2. Using the Torx L wrench or screw bit(Torx 20), join the dome cover and the micro SD card cover.

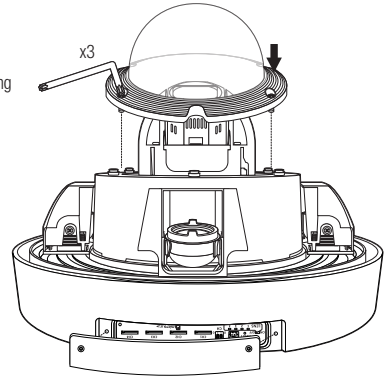

- Use the Torx L wrench or screw bit to firmly tighten the fastening bolts so that there is no water damage issue.

Mounting lens module

1. Remove the cap from the lens module mounting portion.
2. Align and fasten the connector of the lens module with the connector of the camera body.

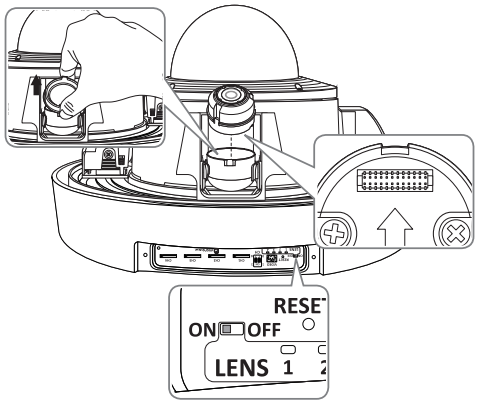

- Install the lens module while power is not connected (HPoE).
- Make sure the power switch is "**OFF**" before installing the lens module. Replacing the lens module while it is "**ON**" can cause malfunction.
- You are recommended to avoid touching the lens separately, as it is shipped from the factory with the focus adjusted during the manufacturing inspection.

- When inserting the lens module, insert it until the top/bottom hooks "**click**".
- After mounting the lens module, make sure all four channels are working properly.
  - If any of those channels is flipped, a PTZ calibration error occurs.

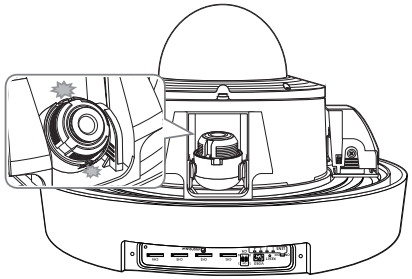

3. Complete the lens mounting process.
4. Connect power to the product (HPoE).

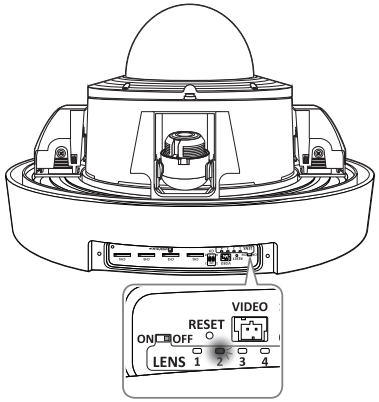

- If the lens module is not attached correctly, the lens module status light will illuminate red, as shown in the figure. If this occurs, turn off the power switch and reattach the lens module.
  If attached normally, it will illuminate green and then turn off after approximately 40 seconds.
- If you want to replace the lens module while connecting power to the product (HPoE), turn the power switch "**OFF**", replace the lens module, and then turn the power switch "**ON**".
- Be careful not to use any tool with a sharp point when handling the switch since it might be damaged.
- Be careful not to forcefully handle the switch since it might be damaged.

Preparing & Installing Camera Bracket

For installation guidelines for brackets and housings, refer to the installation manual that is enclosed with the bracket or housing.

- **Available Bracket Models**

Model	Item
SBP-390WM2	Wall Mount
SBP-300CMW	Ceiling Mount
SBP-300LMW	Parapet Mount
SBP-300KMW	Corner Mount
SBP-300PMW	Pole Mount

Attaching to the unbundled adapter

Choose and purchase a necessary one of the following options (unbundled) that is suitable to the installation site or for your convenience.
See "**Optional Accessories for Installation**" for separately sold products. (Page 8)

1. Pass the cables externally exposed through a wall or pole mount through the installation base.

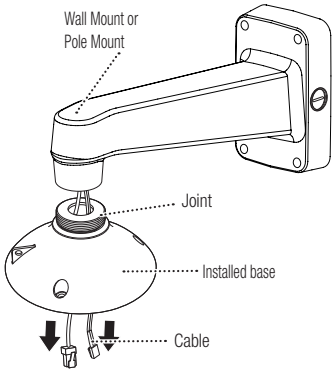

2. Turn the installation base in the direction of the arrow to join it to the mount.

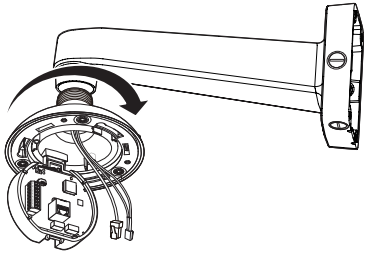

- If the product is installed in an area where outside moisture can penetrate through the mount, use the provided cable bushing to block the inflow of outside moisture.
  - Coat the cable bushing with an appropriate amount of grease and connect the cable to the correct hole of the cable bushing. Plug the remaining holes not penetrated by cables with the pins.

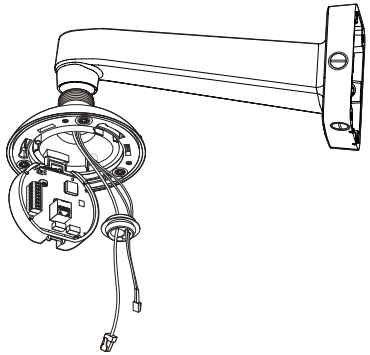

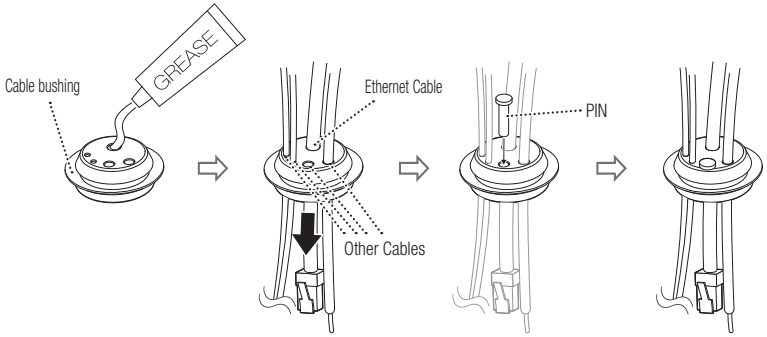

  - Inside the installation base, plug the cable bushing in the joint hole. When plugging it in, press the whole bushing area evenly so that it is properly plugged into the hole.

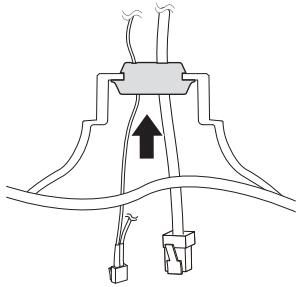

3. Connect the network, I/O, and audio cable to the I/F PCB.

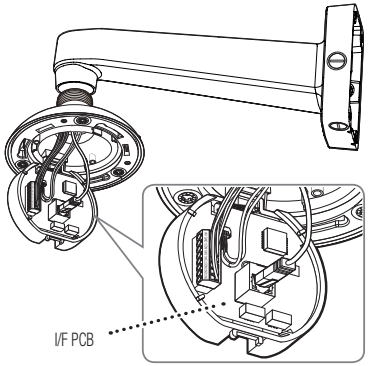

- For smooth joining with the PTZ camera, please be careful with the shape and form.
  (After joining the camera, the cable might be tangled as the I/F PCB rotates.)

4. After fastening the I/F PCB to the body, install the safety wire of the camera body to the installed base.

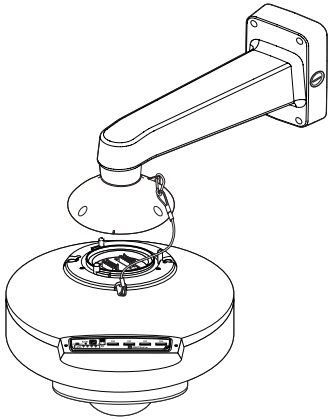

5. Join the installed base and the camera body by matching the Installation direction guides.

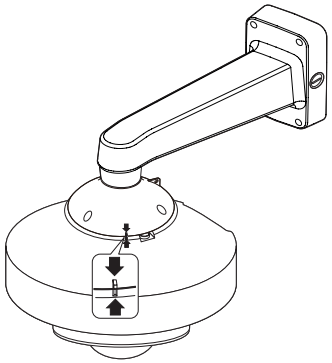

6. Turn the camera in the direction of the arrow so that the installation direction guides at the top and bottom are placed as shown below.

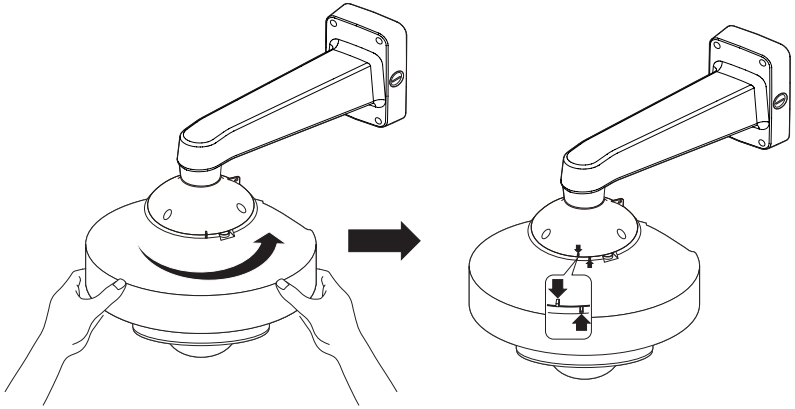

7. Use the screw bit(Torx 30) to secure the installed base and the camera.
8. Adjust the lens to the desired direction by referring to "**Adjusting the monitoring direction for the camera**". (Page 16)
   - If you tilt the lens, you may need to adjust the lens as this may block the screen.

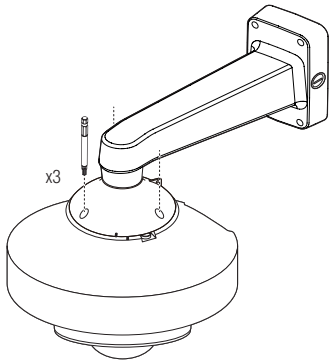

9. Use the Torx L wrench or screw bit(Torx 20) to join the window cover.

- Use the Torx L wrench or screw bit to firmly tighten the fastening bolts so that there is no water damage issue.
- Since the window cover is transparent, there is no safety wire. Please be careful not to drop it.

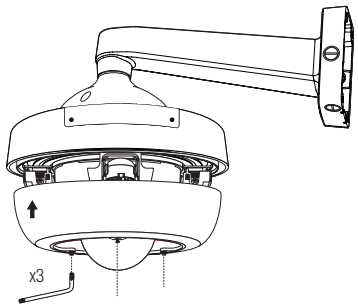

How to set up channels to monitor for installation

The camera body has a channel DIP switch, as shown in the figure.

You can change the channel of the camera using the channel DIP switches.

CH1	CH2	CH3	CH4
00	01	10	11

- If a DIP switch is not fully On/Off, the product may malfunction. After installation, check the DIP switches at the back.
- Be careful, as you will risk damaging a DIP switch if you manipulate it using a sharp tool.
- Be careful, as a DIP switch may be damaged if you operate it with excessive force.

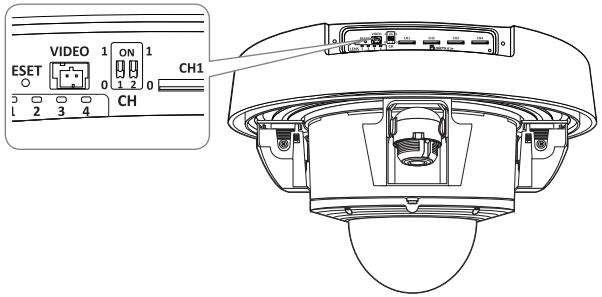

Connecting the installation monitor

Connect the Test Monitor Out Port of this product to the video input terminal of the monitor for installation.

- The wiring varies depending on your monitor type and peripheral devices; please refer to the user manual for each device.
- Please make sure the monitor and camera are turned off when connecting them.

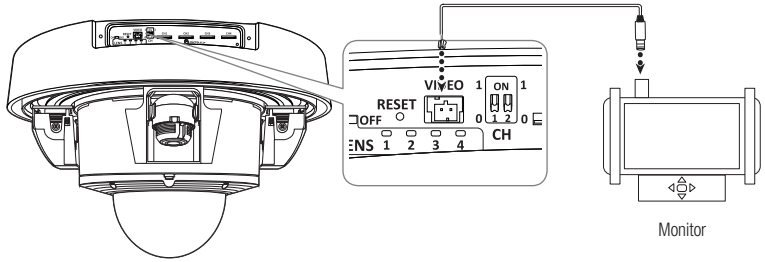

- This product is a network camera that transfers video over a network; the Test Monitor Out Port is used to set the imaging range of the camera at installation.
- Using the terminal for monitoring purposes may cause problems such as degradation in video quality.
- It is not suitable for 24-hour monitoring using professional CRT monitors or TFT/LCD portable monitors.
- Use the network transfer screen for 24-hour monitoring and storage.
- You can only check the videos of the 4CH lens module, not the videos of the PTZ.
- After mounting the lens module, make sure all four channels are working properly.
  - If any of those channels is flipped, a PTZ calibration error occurs.

Adjusting the monitoring direction for the camera

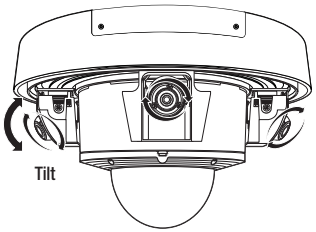

Moving the camera module (Pan)

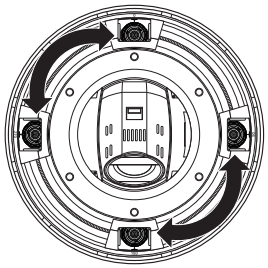

- **Adjusting the monitoring direction**

You can adjust the camera direction only when the camera is fixed on the ceiling.
The act of moving the camera module is called “Pan”; adjusting its angle “Tilt”; rotating the lens along the axis “Rotate”.

- The rotation angle of Pan is -90˚ to +90˚ for each module.
- The rotation angle of Rotation is -180˚ to +180˚.
- The rotation angle of Tilt varies for each lens. See the table below.

- The image can be covered up by the camera case depending on the angle.
- Do not pan over the specified rotation angle. It might damage the cable leading to a product malfunction.

- **Methods of adjustment**

1. After installing the camera in consideration of the direction to monitor, adjust the Pan angle along the bottom rail.
2. Adjust the horizontal angle so that the image does not appear to be reversed during rotation.
3. Adjust the tilt angle so that it points in the direction to be monitored.

- **Tilting angle range for each lens module**

Lens module name	SLA-2M2400P	SLA-2M2800P	SLA-2M3600P	SLA-2M6000P	SLA-2M1200P	SLA-5M3700P	SLA-5M4600P	SLA-5M7000P
Normal installation	52˚~56˚	26˚~80˚	22˚~84˚	10˚~95˚	10˚~97˚	36˚~73˚	21˚~85˚	12˚~93˚
For HallywayView	Not supported	37˚~70˚	33˚~73˚	17˚~88˚	12˚~92˚	45˚~62˚	38˚~74˚	21˚~85˚

- A partial blockage of view at a corner of the monitor may occur as the result of installation beyond the allowed angle range.

CONNECTING WITH OTHER DEVICE

Camera Wiring Interface Board

For the camera wiring, please refer to the picture below.

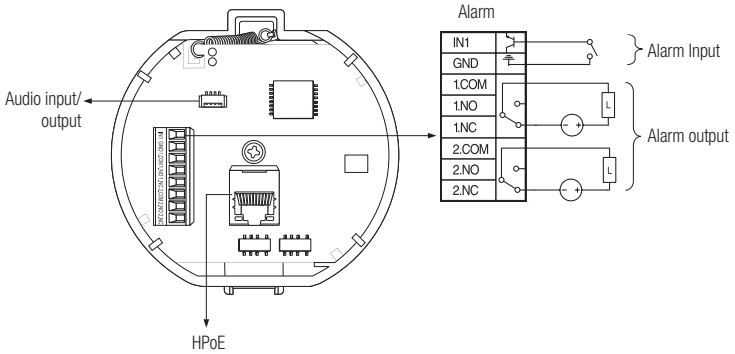

- When the alarm output is connected as Normal Open:
  - the sensor input operates when it is short for point contact type, or at the “LOW” level for active type.
- The maximum capacity of the alarm output terminal is 30V DC/2A, 125V AC/0.5A and 250V AC/0.25A.
- When connecting alarm input and output cables, be sure to connect one cable to each terminal respectively.
- To connect products over the camera’s capacity, please use an additional relay device.
- Improper connection of GND with NC/NO port and COM port might cause fire or product damage.

Connecting to Audio Input/Output

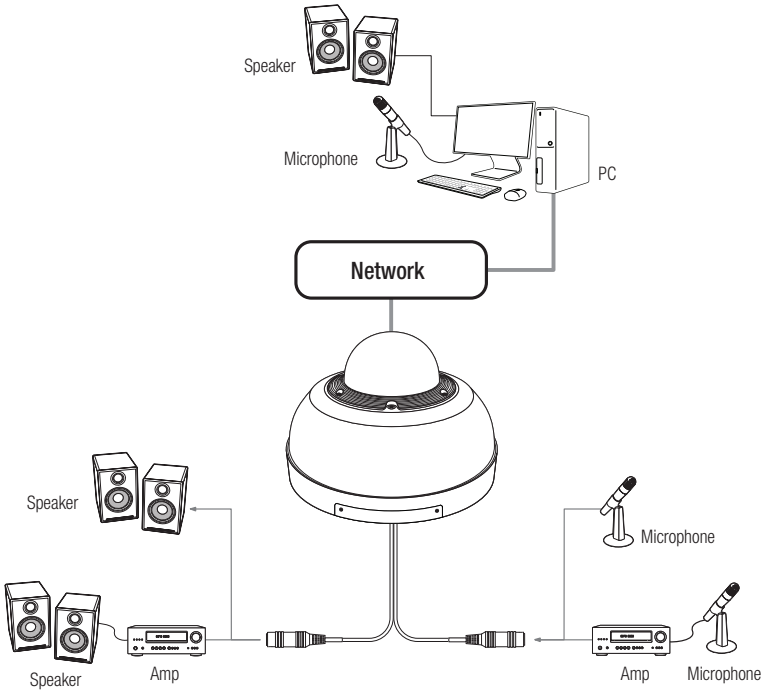

1. Connect the AUDIO IN port of the camera with the microphone or LINE OUT port of the amplifier that the microphone is connected to.
2. Connect the AUDIO OUT port of the camera with the speaker or LINE IN port of the amplifier that the speaker is connected to.
3. Check the specifications for audio input.

- **Audio Codec**
  - Audio In : G.711 PCM (Bit Rate: 64kbps / Sampling Frequency: 8kHz), G.726 ADPCM (Bit Rate: 16Kbps, 24Kbps, 32Kbps, 40Kbps / Sampling Frequency: 8kHz), AAC (Bit Rate: 48Kbps / Sampling Frequency: 16kHz)
  - Audio Out : G.711 PCM (Bit Rate: 64kbps / Sampling Frequency: 8kHz)
- **Full duplex Audio**
- **Audio in** : Selectable (microphone/Line-in), Supported voltage: 2.5VDC (4mA), Input impedance: 2K Ohm
- **Audio out** : Line-out (3.5mm mono jack), Maximum output: 1Vms, Line out impedance : 600Ω

Powering and networking

Connect the HPoE injector with the HPoE port of the camera.

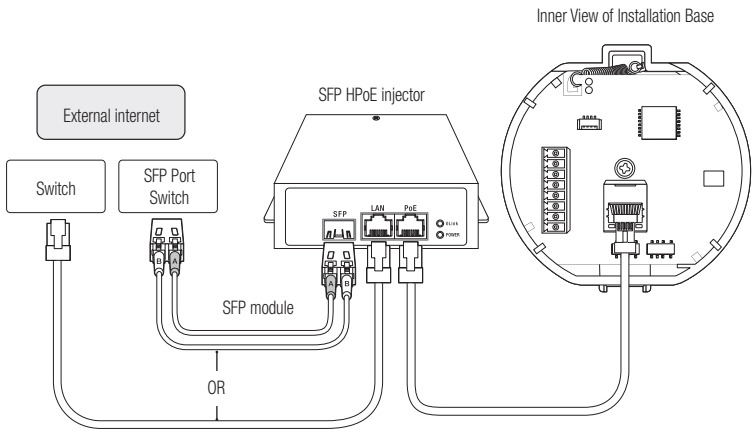

- The product cannot be used at -35°C or below ambient temperature.
- The product may not be defrosted depending on the installation area at -35°C.
- After the product is left alone under a low temperature environment, it will take up to 3 hours to normally operate.
- If the product is turned on after being exposed to -20°C or below environment for some time, reset the time.
- Use the provided SFP HPoE injector when connecting power and network.
- Use only either one of network cable or fiber optic cable for connection.

Network Cable Specification

Item	Contents	Remark
Connector	RJ45 (10/100/1000BASE-T)	
Ethernet	10/100/1000BASE-T	To operate with 1000BASE-T, a cable of UTP-6 or higher should be used for the Giga hub.
Cable	Category 6	
Max Distance	100 m	DC Resistance ≤ 0.125 Ω/m
HPoE Support	HPoE	

- Use an STP cable to increase the protection from thunderstroke damage.

SFP port Specification

Support SFP Voltage	3.3 V Typical
Support SFP Current	300 mA Max.
Support SFP Cage	Standard mini-SFP Cage(for 6.5 mm pitch SFP)
Support SFP Port Type	LC Type
Required SFP Speed	1250 Mbps(For 1000 Mbps Ethernet)
Required SFP's BER(Bit Error Rate)	Max 10^{-12}
Transmission Method(Optical)	Mode Depends on SFP Module
Optical Mode(Long/Short Wave)	Mode Depends on SFP Module
Cable Insertion Loss(dB)	Mode Depends on SFP Module

- The connection/disconnection of the SFP module must be made only after the HPoE injector is turned off.
- A kink in the optical cable may disrupt the connection for communication.
- Do not directly look at the optical cable. It can damage your eyes.

You can set up the network settings according to your network configurations.

CONNECTING THE CAMERA DIRECTLY TO LOCAL AREA NETWORKING

Connecting to the camera from a local PC in the LAN

1. Launch an Internet browser on the local PC.
2. Enter the IP address of the camera in the address bar of the browser.

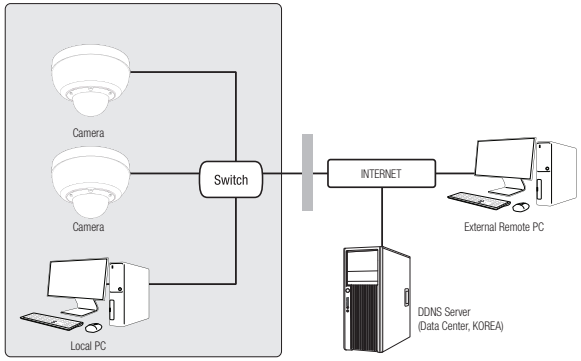

<Local Network>

- A remote PC in an external Internet out of the LAN network may not be able to connect to the camera installed in the intranet if the port-forwarding is not properly set or a firewall is set.
  In this case, to resolve the problem, contact your network administrator.
- By factory default, the IP address will be assigned from the DHCP server automatically.
  If there is no DHCP server available, the IP address will be set to 192.168.1.100.
  To change the IP address, use the Device Manager.
  For further details on Device Manager use, refer to "**Using Device Manager**". (Page 20)

CONNECTING THE CAMERA DIRECTLY TO A DHCP BASED DSL/CABLE MODEM

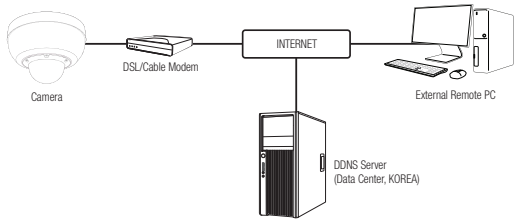

1. Connect the user PC directly with the network camera.
2. Run the Device Manager and change the IP address of the camera so that you can use the web browser on your desktop to connect to the camera.
3. Use the Internet browser to connect to the web viewer.
4. Move to [**Setup**] page.
5. Move to [**Network**] – [**DDNS**] and configure the DDNS settings.
6. Move to [**Basic**] – [**IP & Port**], and set the IP type to [**DHCP**].
7. Connect the camera, which was removed from your PC, directly to the modem.
8. Restart the camera.

- For information on how to set DDNS, refer to the online help of Web Viewer.
- For information on how to set the IP format, refer to the online help of Web Viewer.

USING DEVICE MANAGER

- Device manager program can be downloaded from <**Support**>-<**Online Tool**> menu at Hanwha Vision website (https://www.HanwhaVision.com).
- More instructions of Device Manager can be found at <**Help**> menu of the main page.

AUTOMATICALLY SEARCHING CAMERA

If a camera is connected to the same network of the PC where device manager is installed, you can find network camera by using search function.

1. Click <**Search**> at the main page of device manager.
2. Check the camera from the list.
   - Check MAC address at the sticker attached to the camera.

CONFIGURING IP ADDRESS

If you want to change camera network setting, <**Login OK**> sign must be displayed at <**Status**>. Click <**Authentication**> at the main page to log in.

Configuring Static IP

Manually insert and configure IP address & port information.

1. Click the camera from the list that you want the change the IP setting.
2. Click <**IP Assign**> at the main page of device manager.
3. Select <**Assign the following IP address**>.
   - IP information of the camera will be displayed as previously set.
4. Fill in IP & Port related categories.

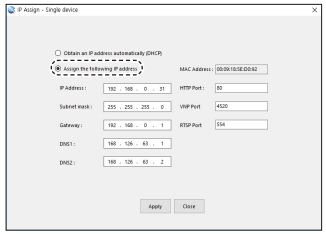

If not using a Broadband Router

For setting <**IP Address**>, <**Subnet Mask**>, and <**Gateway**>, contact your network administrator.

- HTTP Port : Used to access the camera using the Internet browser, defaulted to 80.
- RTSP Port: A port that controls real-time streaming. The initial value is 554.

If using a Broadband Router

- IP Address : Enter an address falling in the IP range provided by the Broadband Router.
  ex) 192.168.1.2~254, 192.168.0.2~254,
  192.168.XXX.2~254
- Subnet Mask : The <**Subnet Mask**> of the Broadband Router will be the <**Subnet Mask**> of the camera.
- Gateway : The <**Local IP Address**> of the Broadband Router will be the <**Gateway**> of the camera.

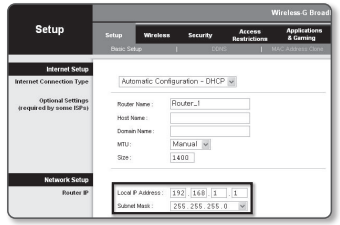

- The settings may differ depending on the connected Broadband Router model.
  For more information, refer to the user manual of the applicable router.
- For more information about port forwarding of the broadband router, refer to "**Port Range Forward (Port Mapping) Setup**". (Page 22)

If the Broadband Router has more than one camera connected

Configure the IP related settings and the Port related settings distinctly with each other.

ex)

Category		Camera #1	Camera #2
IP related settings	IP Address Subnet Mask Gateway	192.168.1.100 255.255.255.0 192.168.1.1	192.168.1.101 255.255.255.0 192.168.1.1
Port related settings	HTTP Port RTSP Port	8080 554	8081 555

- If the <**HTTP Port**> is set other than 80, you must provide the <**Port**> number in the address bar of the Internet browser before you can access the camera.
  ex) http://IP address : HTTP Port
  http://192.168.1.100:8080

5. Click [**Apply**] Button.
6. If the success message is displayed, click [**OK**].

Configuring Dynamic IP

Receive IP address from DHCP

- Example of the Dynamic IP environment
  - If a Broadband Router, with cameras connected, is assigned an IP address by the DHCP server
  - If connecting the camera directly to modem using the DHCP protocols
  - If IPs are assigned by the internal DHCP server via the LAN

1. Click the camera from the list that you want to change the IP setting.
2. Click <**IP Assign**> at the main page of device manager.
3. Select <**Obtain an IP address automatically (DHCP)**>.
4. Click [**Apply**] button.
5. If the success message is displayed, click [**OK**].

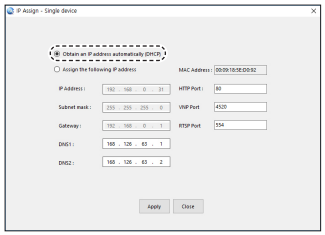

MANUALLY REGISTERING CAMERA

If the camera cannot be found using search function, the camera can be registered remotely by manually inserting IP information, if the camera is connected to external network.

1. Click <**Add Devices**> - <**Manually Add Device**> at the main page of device manager.
2. Insert the range of IP address that you search.
3. Select the <**Model Name**> of the camera that you register, and insert HTTP port, ID, and password.
4. Click [**Register**] button.
5. Check if camera is registered.
   - Check MAC address at the sticker attached to the camera.

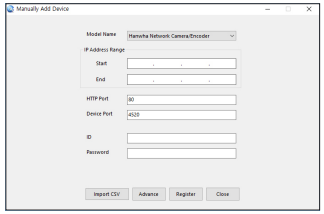

AUTOMATICALLY CONFIGURING IP

1. Click the camera from the list that you want to automatically configure the IP.
2. Click < **+** > at the main page of device manager.
   - Equipment Setting menu appears.
3. At the menu, click <**Auto IP Configure**>.
4. Click [**Close**] button.

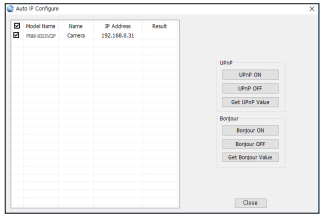

PORT RANGE FORWARD (PORT MAPPING) SETUP

If you have installed a Broadband Router with a camera connected, you must set the port range forwarding on the Broadband Router so that a remote PC can access the camera in it.

Manual Port Range Forwarding

1. From the Setup menu of the Broadband Router, select <**Applications & Gaming**> - <**Port Range Forward**>.
   For setting the port range forward for a third-party Broadband Router, refer to the user guide of that Broadband Router.
2. Select <**TCP**> and <**UDP Port**> for each connected camera to the Broadband Router.
   The number of each port to be configured to the IP router should be set according to the port number designated in <**Setup**> - <**Basic**> - <**IP & Port**> on the camera web viewer.
3. When done, click [**Save Settings**].
   Your settings will be saved.

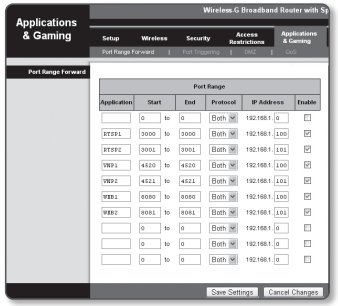

- Port forwarding setting is an example of setting CISCO IP router.
- The settings may differ depending on the connected Broadband Router model.
  For more information, refer to the user manual of the applicable router.

Setting up Port Range Forward for several network cameras

- You can set a rule of Port Forwarding on the Broadband Router device through its configuration web page.
- A user can change each port using the camera setting screen.

When Camera1 and Camera2 are connected to a router :

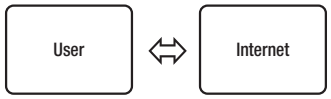

Broadband Router			
Start	End	Protocol	IP Address
3000	3000	TCP/UDP	192.168.1.100
3001	3001	TCP/UDP	192.168.1.101
8080	8080	TCP/UDP	192.168.1.100
8081	8081	TCP/UDP	192.168.1.101

Camera1 (192.168.1.100)	
HTTP port	8080
RTSP port	3000

Camera2 (192.168.1.101)	
HTTP port	8081
RTSP port	3001

- Port forwarding can be done without additional router setup if the router supports the UPnP (Universal Plug and Play) function. After connecting the network camera, select the checkbox from the menu <**Quick connect**> in <**DDNS**> in "**Settings** -> **Network** -> **DDNS**".

CONNECTING TO THE CAMERA FROM A SHARED LOCAL PC

1. Run device manager.
   It will scan for connected cameras and display them as a list.
2. Double-click a camera to access.
   The Internet browser starts and connects to the camera.

- Access to the camera can also be gained by typing the camera's IP address in the address bar of the Internet browser.

CONNECTING TO THE CAMERA FROM A REMOTE PC VIA THE INTERNET

On a remote computer that is not in the Broadband Router's network cluster is not allowed, users can access cameras within a Broadband Router's network by using the camera's DDNS URL.

1. Before you can access a camera in the Broadband Router network, you should have set the port range forward for the Broadband Router.
2. From the remote PC, launch the Internet browser and type the DDNS URL address of the camera, or the IP address of the Broadband Router in the address bar.
   ex) http://ddns.hanwha-security.com/ID

- To use DDNS, sign up at the DDNS homepage (http://ddns.hanwha-security.com) and register the product at [**My DDNS**]> [**Register Product**].

CONNECTING TO THE CAMERA

Normally, you would

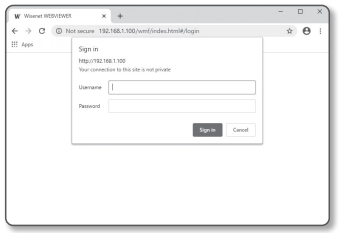

1. Launch the Internet browser.
2. Type the IP address of the camera in the address bar.
   ex) • IP address (IPv4) : 192.168.1.100 ➞ http://192.168.1.100
   - the Login dialog should appear.
   • IP address (IPv6) : 2001:230:abcd: ffff:0000:0000:ffff:1111 ➞ http://[2001:230:abcd:ffff:0000:0000:ffff:1111] - the Login dialog should appear.

If the HTTP port is other than 80

1. Launch the Internet browser.
2. Type the IP address and HTTP port number of the camera in the address bar.
   ex) IP address : 192.168.1.100:HTTP Port number(8080)
   ➞ http://192.168.1.100:8080 - the Login dialog should appear.

Using URL

1. Launch the Internet browser.
2. Type the DDNS URL of the camera in the address bar.
   ex) URL address : http://ddns.hanwha-security.com/ID
   - the Login dialog should appear.

■ Network connection is disabled in the LAN only environment.

Connecting via UPnP

1. Run the client or operating system in support of the UPnP protocol.
2. Click the camera name for search.
   In the Windows operating system, click the camera name searched from the network menu.
   - The login window is displayed.

Connecting via Bonjour

1. Run the client or operating system in support of the Bonjour protocol.
2. Click the camera name for search.
   In the Mac operating system, click the camera name searched from the Bonjour tab of Safari.
   - The login window is displayed.

To check the DDNS address

If the camera is connected directly to a DHCP-based cable modem or DSL modem, the IP address will change each time it tries to connect to the ISP (the company you subscribed to).
If this is the case, you will not be informed of the IP address changed by DDNS.

Once you register a dynamic IP-based device with the DDNS server, you can easily check the changed IP when you try to access the device.
To register your device to the <**DDNS**> server, visit http://ddns.hanwha-security.com and register your device first, and then set the Web Viewer's <**Network**> - <**DDNS**> to <**DDNS**>, as well as providing <**Product ID**> that had been used for DDNS registration.

PASSWORD SETTING

When you access the product for the first time, you must register the login password.

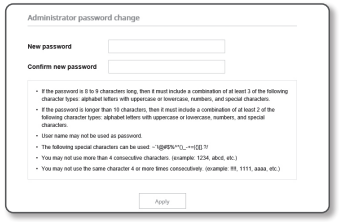

- For a new password with 8 to 9 digits, you must use at least 3 of the following: uppercase/lowercase letters, numbers and special characters. For a password with 10 to 15 digits, you must use at least 2 types of those mentioned.
  - Special characters that are allowed. : ~`!@#$%^*()_-+=|{}[].?/
- For higher security, you are not recommended to repeat the same characters or consecutive keyboard inputs for your passwords.
- If you lost your password, you can press the [**RESET**] button to initialize the product. So, don't lose your password by using a memo pad or memorizing it.

LOGIN

Whenever you access the camera, the login window appears.
Enter the User ID and password to access the camera.

1. Enter "**admin**" in the <**User name**> input box.
   The administrator ID, "**admin**", is fixed and can not be changed.
2. Enter the password in the <**Password**> input field.
3. Click [**Sign in**].
   If you have logged in successfully, you will the Live Viewer screen.

- When you access the camera web viewer, pay special attention to the security by checking whether the image data is encrypted.

- You will experience the best video quality if the screen size is 100%. Reducing the ratio may cut the image on the borders.

CAMERA WEB VIEWER SETUP

1. Click the [**Setup (⚙)**] icon.
2. The Settings window appears.
3. You can configure settings for the camera's basic information, video, audio, network, event, analysis, and system over the network.
4. Click <**Help (?)**> to view detailed descriptions of each function.

TROUBLESHOOTING

PROBLEM	SOLUTION
No video is displayed when accessing the plug-in free webviewer on Safari via HTTPS.	• On the authentication popup window prompted when initially accessing https, click "View Authentication Certificate" and select the "Always trust when connecting to the designated webviewer IP" check box. • If the webviewer continues failing to display a video after you select "Next" on the message window below, press the command key + Q to exit the Safari browser, access again and follow the procedures stated above.
I can't access the camera from a web browser.	• Check to make sure that the camera's Network settings are appropriate. • Check to make sure that all network cables have been connected properly. • If connected using DHCP, verify that the camera is able to acquire dynamic IP addresses without any problem. • If the camera is connected to a Broadband Router, verify that port forwarding is properly configured.
Viewer got disconnected during monitoring.	• Connected Viewers become disconnected upon any change to camera or network configurations. • Check all network connections.
The camera connected to the network is not detected in the Device Manager program.	• Turn off the firewall settings on your PC and then search the camera again.
Images overlap.	• Check whether two or more cameras are set to a single multicast address instead of different addresses. If a single address is used for multiple cameras, the images may overlap.
No image appears.	• If the transmission method is set to multicast, check whether there is a router that supports multicast in the LAN the camera is connected to. • Check whether the lens module is operating normally.

PROBLEM	SOLUTION
Voice is not recorded even though audio input settings are configured.	• You must enable the <Audio In> check box in <Basic> - <Video Profile>.
<Motion detection> of <Analytics> is set to <Enable>, but no notification e-mail reaches me even when an analysis event had occurred.	• Verify the settings in the following sequence: A. Check <Data & Time> settings. B. The <Motion detection> should be set to <Enable>. C. Check if the <E-mail> option of <Event setup> menu is checked to use.
No signal is found at the Alarm Output port even when an intelligent video analysis event is generated.	• Check alarm output port settings.
Cannot record into the Micro SD card.	• Check if the Micro SD card is defective. • When replacing the Micro SD card, it must be done while the power is disconnected from the product.
Micro SD card is inserted but the camera does not operate properly.	• Check if the Micro SD card is inserted in the proper direction. Operation of Micro SD card that is formatted by other devices is not guaranteed with this camera unit. • Format the Micro SD card again in <Setup> ➞ <Event> ➞ <Storage> menu.

Any changes or modifications in construction of this device which are not expressly approved by the party responsible for compliance could void the user's authority to operate the equipment.

This device complies with part 15 of the FCC Rules. Operation is subject to the following two conditions: (1) This device may not cause harmful interference, and (2) this device must accept any interference received, including interference that may cause undesired operation.

This equipment has been tested and found to comply with the limits for a Class A digital device, pursuant to part 15 of the FCC Rules. These limits are designed to provide reasonable protection against harmful interference when the equipment is operated in a commercial environment.
This equipment generates, uses, and can radiate radio frequency energy and, if not installed and used in accordance with the instruction manual, may cause harmful interference to radio communications. Operation of this equipment in a residential area is likely to cause harmful interference in which case the user will be required to correct the interference at his own expense.

eco
RoHS compliant

Hanwha Vision cares for the environment at all product manufacturing stages, and is taking measures to provide customers with more environmentally friendly products.
The Eco mark represents Hanwha Vision's devotion to creating environmentally friendly products, and indicates that the product satisfies the EU RoHS Directive.

Correct Disposal of This Product (Waste Electrical & Electronic Equipment)

(Applicable in the European Union and other European countries with separate collection systems)

This marking on the product, accessories or literature indicates that the product and its electronic accessories (e.g. charger, headset, USB cable) should not be disposed of with other household waste at the end of their working life. To prevent possible harm to the environment or human health from uncontrolled waste disposal, please separate these items from other types of waste and recycle them responsibly to promote the sustainable reuse of material resources.
Household users should contact either the retailer where they purchased this product, or their local government office, for details of where and how they can take these items for environmentally safe recycling.
Business users should contact their supplier and check the terms and conditions of the purchase contract. This product and its electronic accessories should not be mixed with other commercial wastes for disposal.

Correct disposal of batteries in this product

(Applicable in the European Union and other European countries with separate battery return systems.)

This marking on the battery, manual or packaging indicates that the batteries in this product should not be disposed of with other household waste at the end of their working life. Where marked, the chemical symbols Hg, Cd or Pb indicate that the battery contains mercury, cadmium or lead above the reference levels in EC Directive 2006/66. If batteries are not properly disposed of, these substances can cause harm to human health or the environment.
To protect natural resources and to promote material reuse, please separate batteries from other types of waste and recycle them through your local, free battery return system.

Hanwha
Vision