CDVI
Security to Access

# Datasheet

## ATRIUM/ A22K - 2-door controller

### Product description

The A22K is our 3rd generation of ATRIUM, featuring high levels of encryption and flexibility. The A22K brings high security from enterprise level installations to the mid-market.

The A22K can manage traditional readers and cards as well as offering superior support with the latest high security credentials featuring AES128 bit encryption. Paired with the CDVI K2 series of readers (MIFARE, DESFire EV2 credentials) it provides users with full end to end encryption between card - reader - controller and the wider ATRIUM network to ensure cards cannot be cloned and systems cannot be manipulated with.

KRYPTO HIGH SECURITY SOLUTION

ATRIUM ACCESS CONTROL

FULLY ENCRYPTED

### Key features

- 2 doors & 4 readers supported
  *Read In, Read Out*
- Area capacity management for social distancing
- End-to-End AES encryption
- Secure HTTPS (SSL/TLS) web browser
- Includes free software & free app
- Up to 500 doors, 10,000 users & cards

*Certification*

*DEEE*

RoHS *Certification*

*-20°C to 70°C*

All the information contained within this document (pictures, drawing, features, dimensions, specifications), could be perceptibly different and can be changed without prior notice. - May 2020 - CDVI_A22K_DS_02_EN_A4_C

Unit B1 Knaves Beech Business Centre,
Davies Way, Loudwater,
High Wycombe HP10 9QR

10 YEAR WARRANTY

technical@cdvi.co.uk
+44 (0) 1628 531300
www.cdvi.co.uk

CDVI
Security to Access

## Communication

**On-board Ethernet:**
A22K to A22K (max 50 IP-IP)
**Bus:** RS485 A22K (max 4 per A22K)
**Auto:** detect hardware modules
(No DIP Switches)

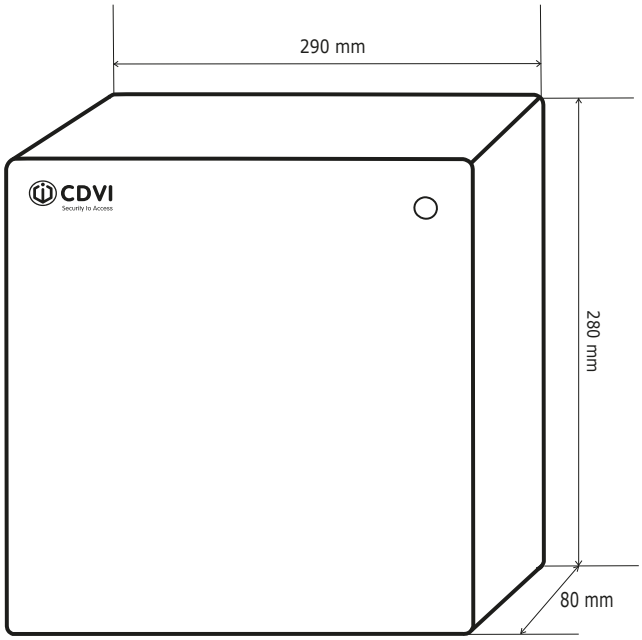


## Reader Support

OSDP V2 compatible
26, 30 & 44 Bit Wiegand format
Track 2 ABA
Reader & Keypad (Card & PIN)
K2 CDVI Reader or all other CDVI Readers
3rd Party if compatible

## Input Specifications

**Reader inputs/ports:** 2 Wiegand readers
OR 4 RS485 high security readers
**Multi-purpose inputs:** 6
(12 using zone doubling)

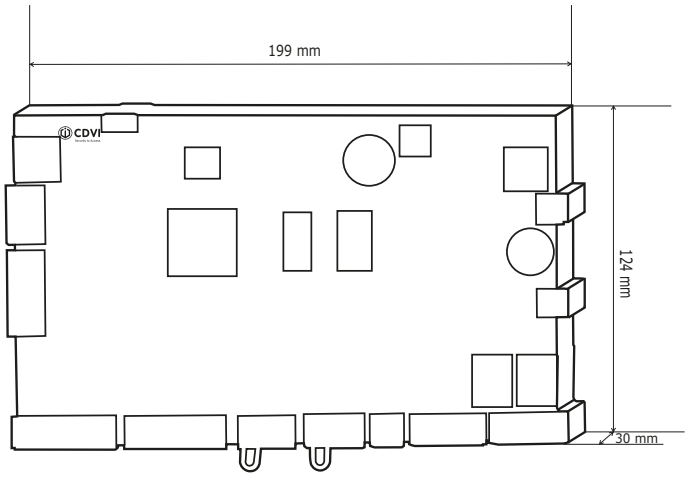


## Output Specifications

**Auxiliary outputs:**
12Vdc @ 1A (fuseless protection)
**Lock outputs:** 2 x (Max 750mA @12Vdc)
**Relay outputs:** 2 x Form C relays
(Dry Contact) 5A @250Vac,
7A @125Vac, 7A @30Vdc

## Electrical Specifications

**Power input:** 120 Vac to 240Vac, 50/60Hz
**Charging current:** 250mA (default), 500mA, or 1A
**Battery backup:** One 12Vdc 7Ah rechargeable acid/lead or gel cell backup battery (Europe: CDVI B7AH recommended). Ensure proper polarity.

All the information contained within this document (pictures, drawing, features, dimensions, specifications), could be perceptibly different and can be changed without prior notice. - May 2020 - CDVI_A22K_DS_02_EN_A4_C

**Unit B1 Knaves Beech Business Centre,**
**Davies Way, Loudwater,**
**High Wycombe HP10 9QR**

**technical@cdvi.co.uk**
**+44 (0) 1628 531300**
**www.cdvi.co.uk**

10 YEAR WARRANTY

CDVI
Security to Access

# Datasheet

## PRXOIMITY CARDS & TAGS - BCD - Mifare® DESFire EV2 Printable Card

### Product description

The BCD Mifare DESFire EV2 4K proximity card is part of our ATRIUM KRYPTO range of high security solutions offered by CDVI. Coded with a AES 128-bit signature it allows effortless enrolment of users at maximum security. The BCD is suitable for use with KRYPTO comptaible readers to guarantee end-to-end security.

From standard proximity to long-range and high secrutiy, our cards & tags offer flexibility for the management of the users.

KRYPTO HIGH SECURITY SOLUTION

MIFARE DESFire

### Key features

- Printable ISO card
- AES128-bit encryption
- Compatible with any Mifare® DESFire EV2 card readers
- 13.56 Mhz proximity card
- Minimum order: 25

CE *Certification*

*DEEE*

RoHS *Certification*

All the information contained within this document (pictures, drawing, features, dimensions, specifications), could be percebtibly different and can be changed without prior notice. - November 2020 - CDVI_ISOEV2_DS_01_EN_A4_C

**CDVI Americas**
**828 St-Martin West**
**Laval, Québec, Canada, H7M 0A7**

10 YEAR WARRANTY

**support@cdvi.ca**
**1-866-610-0102**
**www.cdvi.ca**

CDVI
Security to Access

## Product Information

**Material:** PVC
**Technology:** Mifare® DESFire EV2 4K
AES128-bit encryption
(when used with KRYPTO range)
Hexadecimal random number generation
(not printed)

All the information contained within this document (pictures, drawing, features, dimensions, specifications), could be perceptibly different and can be changed without prior notice. - November 2020 - CDVI_ISOEV2_DS_01_EN_A4_C

**CDVI Americas**
**828 St-Martin West**
**Laval, Québec, Canada, H7M 0A7**

**support@cdvi.ca**
**1-866-610-0102**
**www.cdvi.ca**

CDVI
Security to Access

# Datasheet

## K2 - KRYPTO High Security Reader

### Product Description

KRYPTO
HIGH SECURITY SOLUTION

CDVI's KRYPTO K2 Bluetooth card reader makes high security easy! The reader is MIFARE® DESFire® EV2, combined with CDVI EV2 credentials.

Factory-programmed, the secure CDVI protocol and encryption keys ensure end-to-end encryption between the card, reader and A22K door controller.

It is now possible to use your smartphone as a credential with KRYPTO Mobile-PASS.

### Key Features

- End-to-end encryption built in
- Bluetooth, NFC ready for mobile use
- Supports 13.56 MHz MIFARE Classic and DESFire EV2
- OSDP-2 compatible
- Audible and visual feedback

**Blue** *Standby* | **Green** *Access Granted* | **Red** *Access Denied*

CE Certification

DEEE

RoHS Certification

IP65

IK10

-25°C to 70°C

All the information contained within this document (pictures, drawings, features, dimensions, specifications), could be perceptibly different and can be changed without prior notice. Published: 31 March 2023. CDVI_K2_DS_01_EN-FR_A4_C

**Unit B1 Knaves Beech Business Centre,**
**Davies Way, Loudwater,**
**High Wycombe HP10 9QR**

10 YEAR WARRANTY

**technical@cdvi.co.uk**
**+44 (0) 1628 531300**
**www.cdvi.co.uk**

CDVI
Security to Access

## Product Specifications

| | |
|---|---|
| **Material:** | Polycarbonate |
| **Mounting:** | Surface |
| **Technology:** | 13.56MHz MIFARE Classic and DESFire EV2 / Bluetooth |
| **Security level:** | AES128 |
| **Protocol:** | RS485 + OSDP |
| **Read range:** | Up to 5 cm |

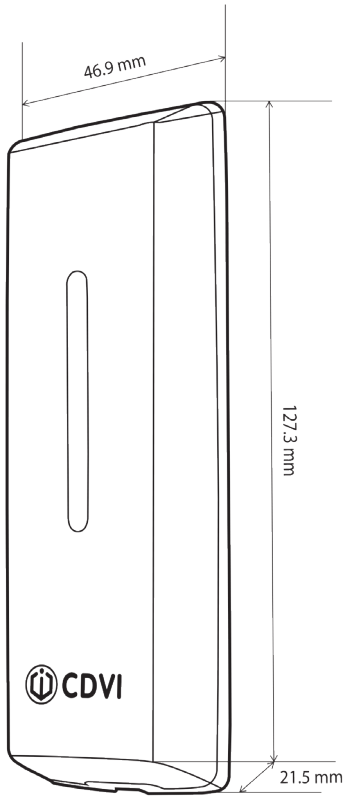


## Electrical Specifications

| | |
|---|---|
| **Power input:** | 12Vdc (from controller) |
| **Consumption:** | 200mA |

## Accessories

**AMC25**
Mobile-PASS smartphone credentials

**METALD**
MIFARE® DESFire® EV2 tag

**TAG-EV2**
MIFARE® DESFire® EV2 tag

All the information contained within this document (pictures, drawings, features, dimensions, specifications), could be perceptibly different and can be changed without prior notice. Published: 31 March 2023. CDVI_K2_DS_01_EN-FR_A4_C

**Unit B1 Knaves Beech Business Centre,**
**Davies Way, Loudwater,**
**High Wycombe HP10 9QR**

**technical@cdvi.co.uk**
**+44 (0) 1628 531300**
**www.cdvi.co.uk**

10 YEAR WARRANTY