Roller Shutter Contact

Grade 2 Class III

Roller Shutter Contact
with Integral Resistors,
Armoured 1m Fly

ADIRS-G2C3-MULTI-W

Features

GRADE 2 CLASS III

Single Reed normally closed

Operating Gap: ~35mm

Resistors must be used in circuit

Contact Dimensions: 157mm x 40mm x 18mm

Warranty: 3 Years

UPC: 840049308190

PART #: ADIRS-G2C3-MULTI-W

For more information contact your ADI sales person or visit us at www.adiglobal.com

Rev: June 23

Roller Shutter Contact

ADIRS-G2C3-MULTI-W

An R/S contact with built in resistors. It must be wired in a fully supervised (EOL) format – it will not function as part of a 4-wire installation. The contact is potted for environmental protection and comes complete with armoured cable sleeving. Resistors are chosen by cable selection.

Operation: The contact will operate with a gap of ~35mm between the magnet and breaking at ~40mm. This distance will vary near magnetic surfaces – use spacer if you encounter resistance variance and/or infrequent tamper issues.

Installation: Fix the units to the mounting surfaces using the holes provided. The contact & magnet can be mounted horizontally or vertically, as long as the magnet meets the contact within the alignment configurations shown below:

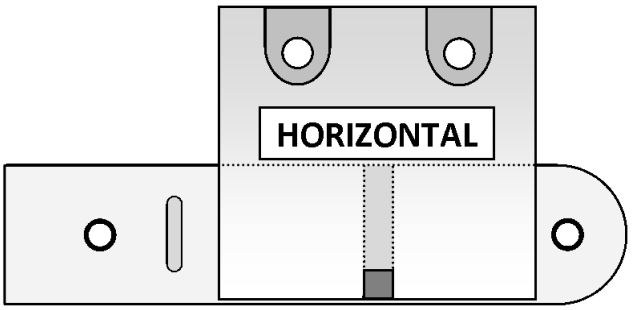

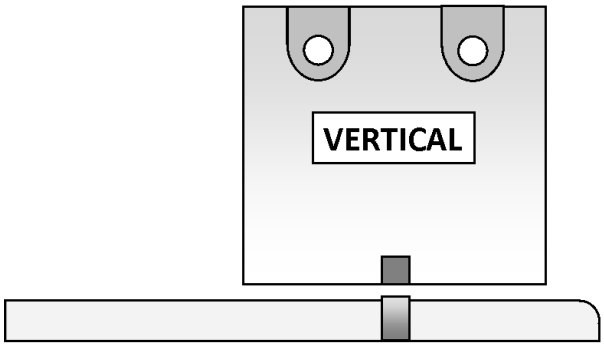

Single Zone Wiring:
Connect your zone wires as shown in the table below. Where two colours are listed, they are intended to be joined together to form the zone wire. We recommend joining wires in a suitable junction box. A Honeywell (1k/1k) example is shown for reference.

PANEL	EOL	ALARM	Wiring to panel	
			Connection 1	Connection 2
Honeywell / Ademco	1k	1k	BLACK	GREEN & BLUE
Europlex (3GS & Aplex)	2k2	2k2	RED & YELLOW	GREEN & BROWN
Castle, Menvier, Pyronix (PCX), Scantronic, Texecom (Premier)	2k2	4k7	RED & YELLOW	GREEN & WHITE
Siemens & Aritech, Pyronix (Matrix)	4k7	4k7	YELLOW	GREEN & WHITE
Gardtec	4k7	6k8	YELLOW	GREEN
Guardall**	8k2	8k2	RED	GREEN

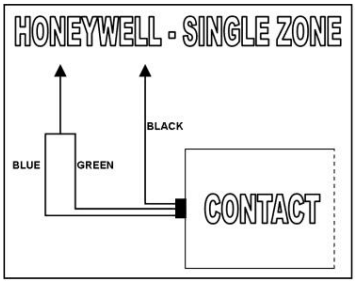

**For Guardall panels, join the blue and white wires together.

Ensure that unused/trimmed wires are insulated. Shorting of unused wires will affect operation.

For more information contact your ADI sales person or visit us at www.adiglobal.com

Rev: June 23

Roller Shutter Contact

ADIRS-G2C3-MULTI-W

Shared Zone Wiring:

N?LCJ	CMJ	?J?PK	Amlr_ar / ugpgle		Amlr_ar 0 ugpgle	
WIRING NOTE			ZONE WIRE(S)	JOIN THESE WIRES IN JUNCTION BOX		ZONE WIRE(S)
Fmlcwucjj* ?bckam	/i	/i	Mp_lec	Epccl $ @jsc	@j_ai	Epccl) @jsc
Cspmnjcv &1EQ $?njcv'((	0i0	2i2	Mp_lec	Epccl $ @pmul	Pcb $ Wcjjmu	Epccl $ @pmul
A_qrjc* Nwpmlgv &NAV'* Rcvcamk &Npckgcp'	0i0	2i5	Mp_lec	Epccl $ Ufgrc	Pcb $ Wcjjmu	Epccl $ Ufgrc
Qgckclq $?pgrcaf* Nwpmlgv &K_rpgv'	2i5	2i5	Mp_lec	Epccl $ Ufgrc	Wcjjmu	Epccl $ Ufgrc
E_pbrca	2i5	4i6	Mp_lec	Epccl	Wcjjmu	Epccl
Es_pb_jj - Kcltgcp- Qa_lrpmlga	Qcc ugpgle bg_ep_kq					

**Europlex(3GS/Aplex) – also join the white wire of each contact to its own blue wire

Wiring Examples – Honeywell

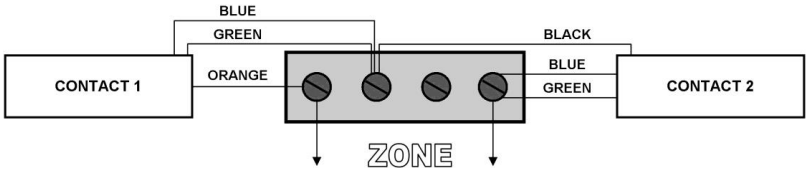

Guardall

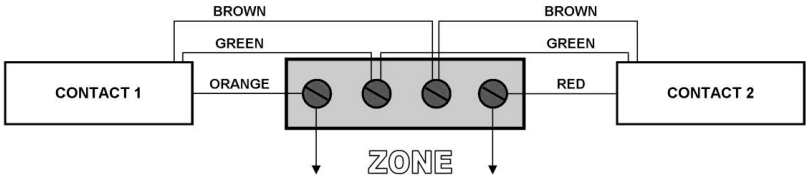

Menvier/Scantronic/Cooper

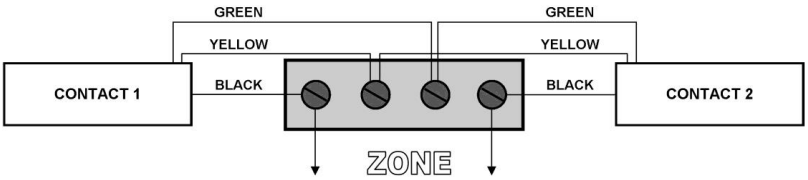

PANEL	Contact 1 & 2 SET (closed)	Contact 1 OPEN	Contact 2 OPEN	Contact 1 & 2 OPEN
Honeywell / Ademco	1k	2k	2k	3k
Europlex (3GS & Aplex)	2k2	4k0	4k0	5k8
Castle, Pyronix (PCX), Texecom (Premier)	2k2	6k9	6k9	11k6
Siemens & Aritech, Pyronix (Matrix)	4k7	9k4	9k4	14k1
Gardtec	4k7	11k5	11k5	18k3
Guardall	4k1	7k5	7k5	8k6
Menvier/Scantronic	2k	6k	6k	7k6

For more information contact your ADI sales person or visit us at www.adiglobal.com

Rev: June 23