Go

Single Loop Fire Alarm Control Panel

The new Go series is an evolution for non-networked single-loop fire alarm systems. Its innovative design includes several improvements and upgrades to critical safety features, while retaining all the benefits and user-friendly operation of an Advanced fire alarm control panel.

A new ergonomic layout of control panel is combined with our high resolution, high contrast, graphical LCD display. The tactile keypad allows simple select-and-click programming for faster engineer configuration and simple end-user operation.

Two performance options are available with a different maximum number of configurable addresses, allowing greater flexibility for site-specific installations: Go and Go+.

Maximum addresses	Apollo (Discovery, XP95)	Hochiki (ESP)	Argus (VEGA)
Go	50	50	50
Go+	126	127	240

Functional improvements include integral zonal LEDs which enable instant identification of alarm locations, and ensure compliance with BS5839 without the cost of a separate LED zone card.

The new PCB integrates both control panel and peripherals on the same board and incorporates the latest high-speed micro-processor technology, for 9 times faster operation than MxPro 4.

Powerful cause-and-effect programming and enhanced trace diagnostics make the panel suitable for a wide range of site applications, from small to medium systems.

All Go series panels are fully programmable on site via the control panel display or with our updated, easy-to-use PC Configuration Tool.

Listings and Approvals

- EN54-2 (1997) +A1:2006
- EN54-4 (1997) +A1:2002 +A1:2006
- Certified to EN54 Parts 2 and 4 by FM Approvals

Features and Benefits

- Multiprotocol support, Apollo (Discovery, XP95), Hochiki (ESP) & Argus (VEGA)
- Graphical LCD user interface, LED indicators & push buttons
- Installer-friendly Auto-learn, Loop detection and On-board scope facility
- 500 fire + 5000 general event logging, with advanced diagnostic precision to aid installation & fault-finding
- Integral 15 Zone LEDs ensures compliance with BS5839, with 35 additional software indication zones
- Uses a new Configuration Tool with Office365 appearance with better graphics and easier functions for programming
- Two on-board Sounder outputs, three on-board Relay outputs
- Optional 3 monitored input/outputs for Fire/Fault routing (with P-Bus adaptor & routing card) for full EN54 compliance when connected to an Alarm Receiving Centre
- Dedicated USB Type B port for direct PC connection
- Future ethernet connectivity to AdvancedLive, which will provide remote notification and panel management
- Innovative 'no hinge' removable door and hangable chassis for easier installation
- Employing an identical monitoring feature as the Mx-5000 series, the Go series meets the requirements of EN54-13 (2005) Clauses 5.3.4.1 and 5.3.4.2 (partial open & short circuits) for optimal fire system performance and complete peace of mind

Advanced User Interface with Graphical LCD

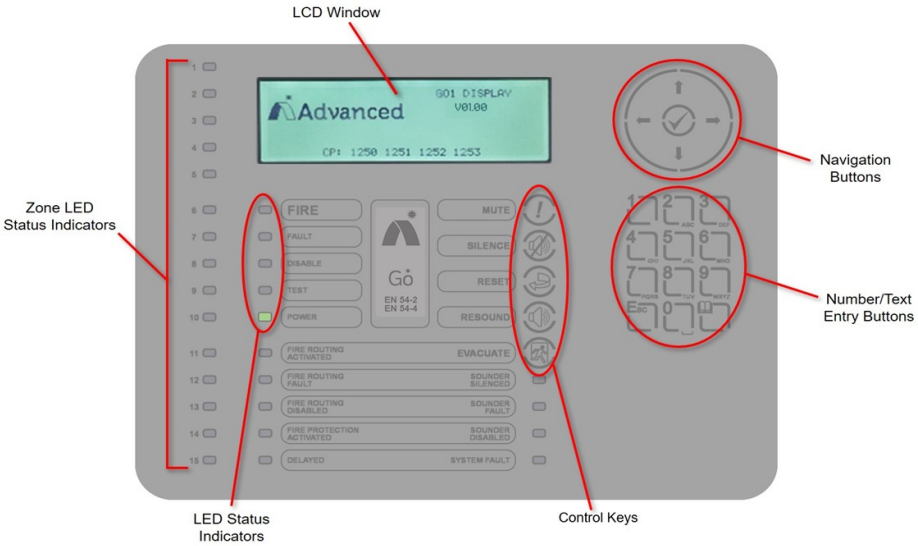

Designed to be user-friendly and easy to operate, the Advanced User Interface with Graphical LCD is the information and control centre for the Go Series Fire Alarm Control Panel.

This interface enables complete system status, interrogation and control via

- Backlit 240x64 pixel digital display
- 5 LED status indicators
- 5 Control buttons
- Arrow Navigation and Select buttons
- 12-button alpha-numeric keypad

Buttons (Keys)

MUTE	Press to mute the internal buzzer.
SILENCE	Press to silence the sounders.
RESET	Press to reset the panel from a fire alarm or latched fault condition.
RESOUND	Press to re-activate the sounders.
EVACUATE	Press to initiate a manual evacuation and sound the alarms.

LED Indicators

FIRE	Red
FAULT	Yellow
DISABLE	Yellow
TEST	Yellow
POWER	Green
FIRE ROUTING ACTIVATED	Red
FIRE ROUTING FAULT	Yellow
FIRE ROUTING DISABLED	Yellow
DELAYED	Yellow
FIRE PROTECTION ACTIVATED	Red
SOUNDER SILENCED	Yellow
SOUNDER FAULT	Yellow
SOUNDER DISABLED	Yellow
SYSTEM FAULT	Yellow

Order Codes and Options

Go	Go1	1 loop fire panel - Grey (Apollo/Hochiki: 50 addresses)
	Go1V	1 loop fire panel - Grey (Argus Vega: 50 addresses)
Go+	Go1+	1 loop fire panel - Grey (Apollo/Hochiki: 126/127 addresses)
	Go1V+	1 loop fire panel - Grey (Argus Vega: 240 addresses)
Options	GOP-001	PBUS Adaptor Card
	GOP-002	Access Enable Key Switch Assembly
	MXP-532	Routing/Protection Interface
	MXP-506	Routing Termination Card

Technical Specifications

PERFORMANCE	
Protocols	Apollo (XP95, Discovery), Hochiki (ESP), Argus (VEGA)
Number of Loops	1
Loop Current [1]	500mA max
Number of Fire Zones	50 max
Sounder Outputs [1]	2 x 1A Programmable (1A total)
Relay Outputs (Programmable)	3 x 1A 30VAC/DC (max) to 10mA 5V (min)
Auxiliary Output [1 2]	24V DC, 100mA (With GOP-001 Fitted)
Display	LCD White backlit 240 x 64 Graphical LCD
Programmable Inputs	1 x Key Switch, 1 x monitored
USB	USB type B interface for PC connection
Network	None
Ethernet	10-Base-T, 100-Base-T
Event Log	5000 Events with Diagnostics + 500 Fire Events

INSTALLATION	
Enclosure	Steel IP30 RAL7035
Dimensions H x W x D mm	345 x 345 x 87
Weight (excluding batteries)	4Kg
Temperature Range	-5°C to 40°C
Humidity (RH)	95% max
Cable Entries	14 x 20mm knockouts at top
AC Supply	220-240V, 50 – 60 Hz, 1.0A max
Safety	EN62368-1, Class 1, Pollution Degree 2, Overvoltage Category II
Battery Capacity	24V 4Ah Internal (min), 24V 7Ah Internal (max)
Charging Current	0.35A Temp Compensated
Deep Discharge Cut-off	19.5V
Power Supply	On-board 24V DC, 1.5A High Efficiency Off-Line Switched Mode
Output Voltage [3]	18.0V – 28.0V
Ripple (Vpkpk)	Up to 1.0V
Max Battery Ohms	1.8Ω ± 0.1 Ω
Imax(a), Imax(b) [4]	1.15A, 1.5A

[1] Total output current from panel not to exceed Imax(b) less internal power consumption.

[2] Aux supply tracks a maximum of 0.5V below battery terminal voltage when no mains supply is available.

[3] Min/Max specifications for the AUX and Sounder outputs. Detector Loop voltage is not dependent on AC or battery voltage.

[4] Only applicable if the panel is configured to turn off the charger in alarm. Otherwise Imax(b) = Imax(a).

As our policy is one of constant product improvement, we reserve the right to modify product specifications without prior notice. E&OE

Product Images

Parts location

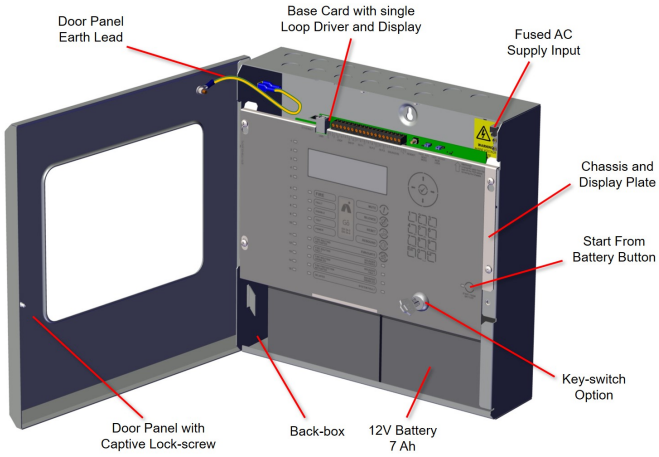

Chassis and back-box

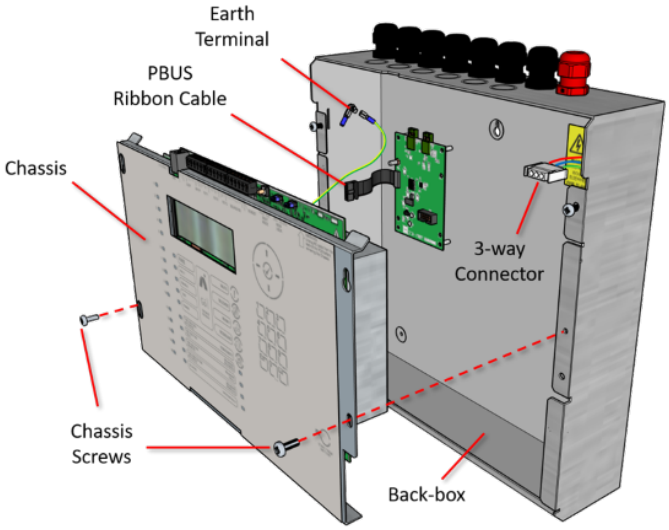

Back-box enclosure

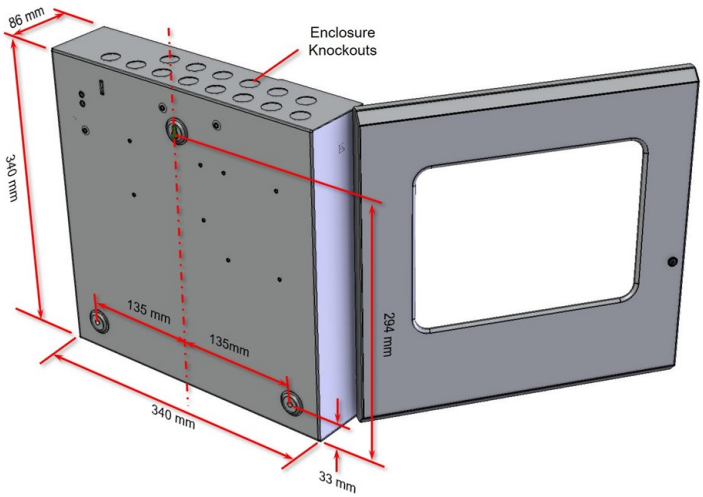

PCB connectors

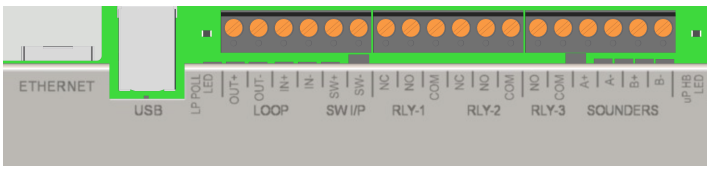

- Ethernet, digital-ready
- USB Type B for PC connection
- Loop input/output, 24VDC 0.5A
- Monitored Switch input
- 3x Relays (Fire, Fault, Other)
- 2x Sounders, each 24VDC 1.0A

Advanced, The Bridges, Balliol Business Park, Newcastle upon Tyne, NE12 8EW, UK T: +44 (0)345 894 7000, E: enquiries@advancedco.com, W: www.advancedco.com

As our policy is one of constant product improvement the right is therefore reserved to modify product specifications without prior notice.